HEAT TREATMENT AND FINAL FINISH

TYPE II FINISH, CLASS B

PHYSICAL PROPERTIES	
V.P.	
T.S.	
EL. 2"	
RED.	
BR.	
ROCK.	
SCL.	

D6535358

★PLATE, ASSEMBLY-C5564222

RIVET-A5020522

PLATE-D6535393

RIVET-A5020711

RIVET-A5160656 (GRIND FLUSH INSIDE & OUTSIDE)

NOTE A
℄ OF HOLE MUST BE SQUARE WITH THIS ℄ WITHIN .003 IN SIX INCHES

SCREW UP TIGHT AGAINST SHOULDER AND SWEAT THREADS WITH HIGH TEMPERATURE SOLDER (500°F MINIMUM MELTING POINT)

2.355
1.180 -.005

DRAW SCREW UP TIGHT, BACK OFF 1/6 TO 1/4 TURN AND STAKE IN TWO PLACES ON INSIDE OF CASING

★PLATE, ASSEMBLY-C5564224

CAM-C5564133

SCREW-A5020527

.190-32 NF-2, COUNTERSINK 82° TO 3/8 DIA

1/4

★BLOCK, ASSEMBLY-BG147093

RIVET-A5020601 (GRIND FLUSH OUTSIDE)

FACES OF REAR MOUNTING LUGS MUST BE CENTRAL WITH FACES AT FRONT MOUNTING HOLES WITHIN .010

NOTE B
℄ OF MOUNTING HOLE MUST BE SQUARE WITH THIS ℄ WITHIN .003 IN SIX INCHES

SECTION A-A

BASE-C5545965

RIVET-A5020600 (GRIND FLUSH OUTSIDE)

SCREW-BCLX1.1, 100866 (STAKE)

JACKET-C5562503

A

A

RIVET-A5152737

PLATE-D6535392

.562+.002

.788 -.015

1.860 +.002

P

SQUARENESS OF ℄ OF FRONT MOUNTING HOLE AS MEASURED AT FACES OF ADAPTER PLATES SHALL BE WITHIN THESE PRESCRIBED LIMITS AND SHALL CONFORM TO LIMITS SPECIFIED IN NOTE A AND NOTE B

★FINDING DIAGRAM

SHOW LETTER P 1/8 HIGH AFTER PROOF FIRING

.440+.002

11.931 ±.004

GRIND FLUSH INSIDE AND OUTSIDE (2 RIVETS)

GRIND FLUSH INSIDE (14 RIVETS)

11.4812 REF

1.071

THE LIMITS OF NON PARALLELISM AND SKEWING OF ℄ OF REAR MOUNTING HOLE WITH RESPECT TO ℄ OF FRONT MOUNTING HOLE AS MEASURED AT THE FACES OF THE REAR MOUNTING LUGS, SHALL BE A MAX. .006 IN SIX INCHES AND SHALL BE WITHIN THESE PRESCRIBED LIMITS

CASING, ASSEMBLY (6535358)

WAS D35358

0 1 2 3 4 5 6 7 8 9 10 11 IN.

DO NOT INSCRIBE PART NO.

SEPTEMBER 30, 1936

REVISIONS
17 5-10-48

CLASS	DIVISION	DRAWING	FILE

TOLERANCE ON DIMENSIONS NOT OTHERWISE SPECIFIED
DECIMAL ± .005
FRACTIONAL ± 1/64
ANGULAR ± 2°

MATERIAL	FINISH	LOT NUMBER
WCO	E.C.	

CHECKED	LOT NUMBER
DSC	

DRG. PERTAINS TO
51-83-1 AT 20 RPF (6.1 RPM)
51-84-1 AT 32 RPF (9.8 RPM)

SUBMITTED:
A.B. Rice

EXAMINED:

APPROVED BY ORDER OF THE CHIEF OF ORDNANCE
Milton Halsey Summers
ORD. DEPT. U.S.A.

D 6535358

ORDNANCE DEPT. U.S.A.

MADE AT ROCK ISLAND ARSENAL

A5020522

HEAT TREATMENT & FINAL FINISH	PHYSICAL PROPERTIES					
	Y. P.		RED.		SCL.	
	T. S.		BR.			
	EL. 2		ROCK			

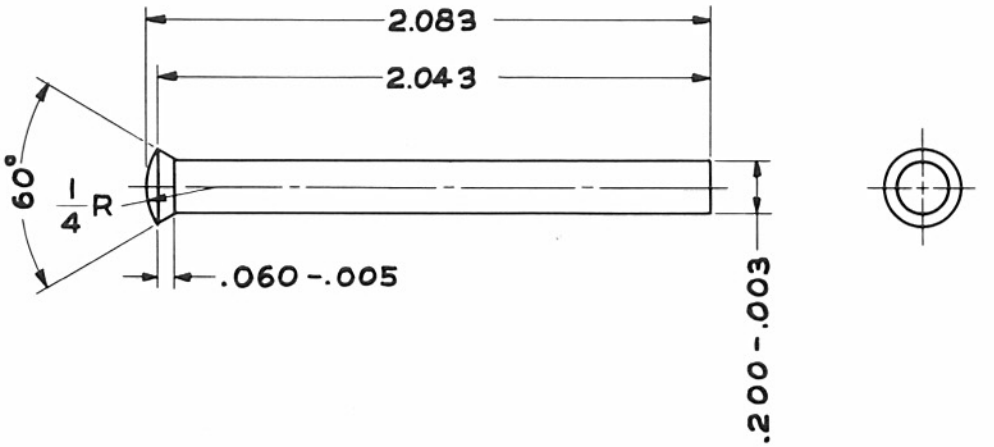

RIVET, TOP PLATE, LONG

STEEL FS 1035

FINISH 125

5020522

WAS A20522

SCALE 2/1 | A | 5020522

APRIL 4, 1927

REVISIONS

12	5-10-48		

DRG. PERTAINS TO

D6535358	.30 BMG 19A4 (FXD) & (FLEX)
D6540989	.30 BMG M19A5 (FXD)
D7114037	.30 BMG M19A6
D6901301	.30 BMG M17A1 (WC)

INSCRIBE PART NO. DO NOT

TOLERANCE ON DIMENSIONS NOT OTHERWISE SPECIFIED
DECIMAL ± .005
FRACTIONAL ± ——
ANGULAR ± 5°

DRAFTSMAN	TRACER	L'D'G DRAFTSMAN
J.J.V.	L.R.E.	
CHECKER L.S.C.	O.O.	CHIEF DRAFTSMAN

SUBMITTED:
A. M. Roe
ORD. DEPT., U. S. A.

APPROVED BY ORDER OF THE CHIEF OF ORDNANCE:
Walter Ackerman
ORD. DEPT., U. S. A.

ORDNANCE DEPT., U. S. A.

A5020527

HEAT TREATMENT & FINAL FINISH	PHYSICAL PROPERTIES					
	Y. P.		RED.		SCL.	
	T. S.		BR.			
	EL. 2		ROCK			

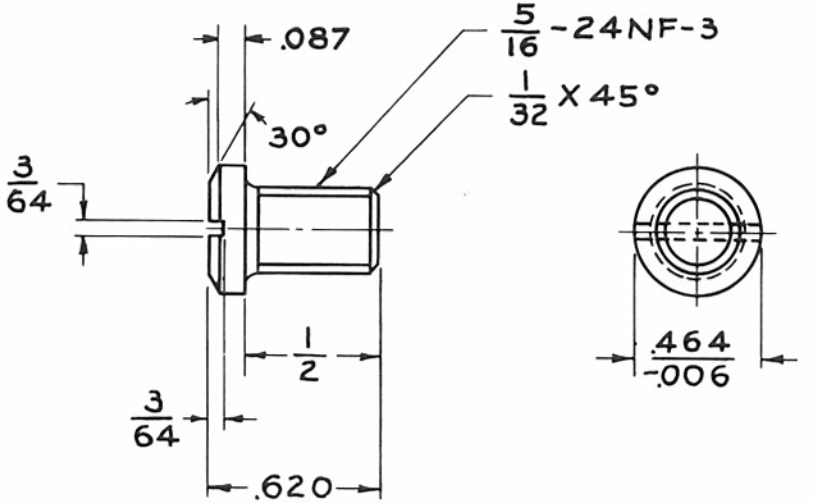

SCREW, BREECH LOCK CAM

STEEL FSX1315

FINISH 125

© 5020527

WAS A20527

SCALE 2/1

A 5020527

APRIL 4, 1927

REVISIONS

15	5-10-48			

DRG. PERTAINS TO

D7114037	.30 BMG M19A6
D6901301	.30 BMG M17A1 (WC)
D6540989	.30 BMG M19A5 (FXD)
D6535358	.30 BMG 19A4 (FXD) & (FLEX)

INSCRIBE PART NO. DO NOT

TOLERANCE ON DIMENSIONS NOT OTHERWISE SPECIFIED
DECIMAL ± .005
FRACTIONAL ± 1/64
ANGULAR ± 5°

DRAFTSMAN	TRACER	L'D'G DRAFTSMAN
R.G.D.	A.V.C.	
CHECKER	O.O.	CHIEF DRAFTSMAN

SUBMITTED:
A. H. Roe
ORD. DEPT., U. S. A.

APPROVED BY ORDER OF THE CHIEF OF ORDNANCE:
Walter Ackerman
ORD. DEPT., U. S. A.

ORDNANCE DEPT., U. S. A.

A 5020600

HEAT TREATMENT & FINAL FINISH	PHYSICAL PROPERTIES					
	Y. P.		RED.		SCL.	
	T. S.		BR.			
	EL. 2		ROCK			

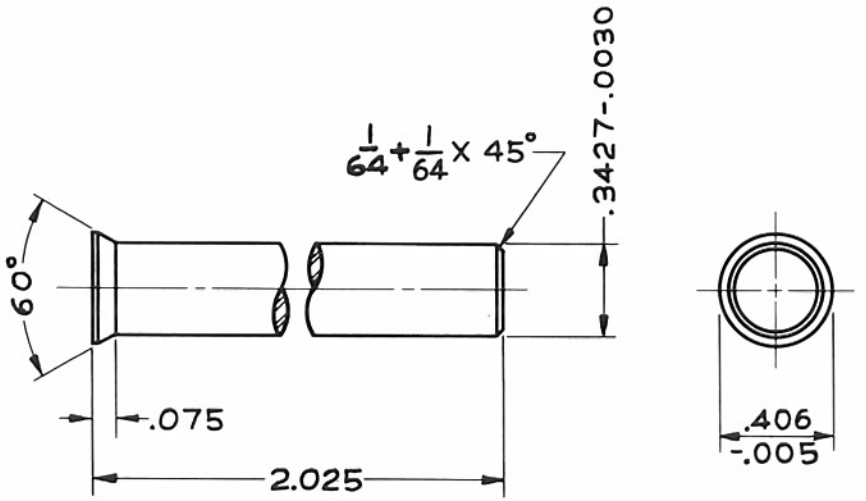

RIVET, SIDE PLATE, LARGE

STEEL FS1035

FINISH 125

5020600

WAS A20600

SCALE 2/1 | A | 5020600

JUNE 1, 1931

REVISIONS

11	5-10-48			

DRG. PERTAINS TO

D6535358	.30 BMG 19A4 (FXD) & (FLEX)
D6540989	.30 BMG M19A5 (FXD)
D7114037	.30 BMG M19A6
D6901301	.30 BMG M17A1 (WC)

~~DO~~ INSCRIBE PART NO. DO NOT

TOLERANCE ON DIMENSIONS NOT OTHERWISE SPECIFIED
DECIMAL ± ——
FRACTIONAL ± 1/64
ANGULAR ± 5°

DRAFTSMAN	TRACER	L'D'G DRAFTSMAN
W.C.O.	L.R.E.	
CHECKER L.S.C.	O.O.	CHIEF DRAFTSMAN

SUBMITTED:
A.W. Roe
ORD. DEPT., U. S. A.

APPROVED BY ORDER OF THE CHIEF OF ORDNANCE:
Walter Ackerman
ORD. DEPT., U. S. A.

ORDNANCE DEPT., U. S. A.

MADE AT ROCK ISLAND ARSENAL

A 5020601

HEAT TREATMENT & FINAL FINISH	PHYSICAL PROPERTIES					
	Y. P.		RED.		SCL.	
	T. S.		BR.			
	EL. 2		ROCK			

JUNE 1, 1931

REVISIONS

12	5-10-48			

DRG. PERTAINS TO

D6535358	.30 BMG 19A4 (FXD) & (FLEX)
D6540989	.30 BMG M19A5 (FXD)
D7114037	.30 BMG M19A6
D6901301	.30 BMG M17A1 (WC)

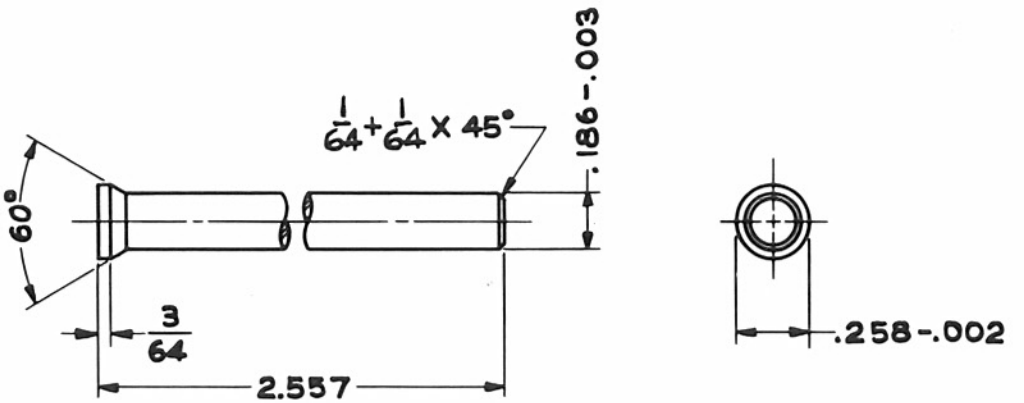

INSCRIBE PART NO. DO NOT

TOLERANCE ON DIMENSIONS NOT OTHERWISE SPECIFIED
DECIMAL ± .005
FRACTIONAL ± 1/64
ANGULAR ± 5°

RIVET, SIDE PLATE, SMALL

STEEL FS1035

FINISH 125

5020601

DRAFTSMAN	TRACER	L'D'G DRAFTSMAN
W.C.O.	L.R.E.	
CHECKER	O.O.	CHIEF DRAFTSMAN

SUBMITTED:
A. W. Roe
ORD. DEPT., U. S. A.

APPROVED BY ORDER OF THE CHIEF OF ORDNANCE:
Walter Ackerman
ORD. DEPT., U. S. A.

ORDNANCE DEPT., U. S. A.

WAS A20601

SCALE 2/1

A 5020601

A5020711

HEAT TREATMENT & FINAL FINISH	PHYSICAL PROPERTIES					
	Y. P.		RED.		SCL.	
	T. S.		BR.			
	EL. 2		ROCK			

APRIL 4, 1927

REVISIONS

19	5-10-48		

DRG. PERTAINS TO

D6535358	.30 BMG 19A4 (FXD.) & (FLEX.)
D7114037	.30 BMG M19A6
D6901301	.30 BMG M17A1 (WC)

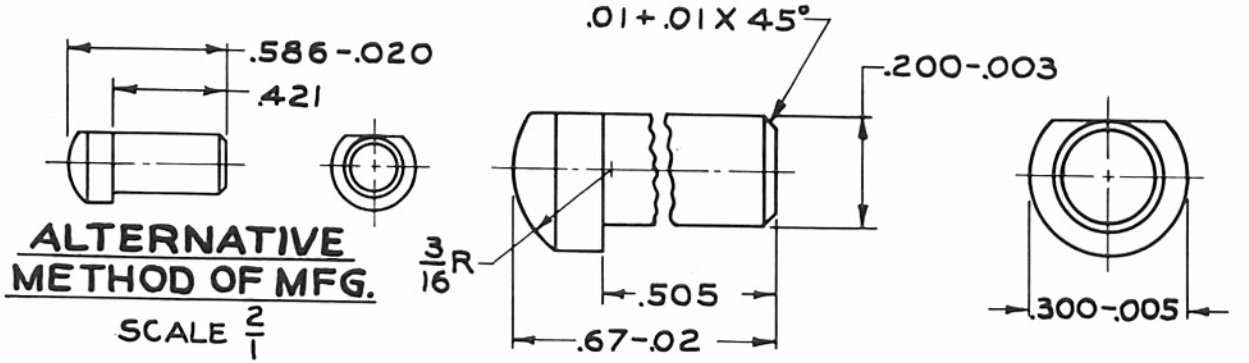

ALTERNATIVE METHOD OF MFG.

SCALE 2/1

RIVET, TOP PLATE, SHORT

STEEL FS1035

FINISH 125

(C) 5020711

WAS A20711

SCALE 4/1

A 5020711

DO NOT INSCRIBE PART NO.

TOLERANCE ON DIMENSIONS NOT OTHERWISE SPECIFIED

DECIMAL ± .005

FRACTIONAL ± 1/64

ANGULAR ± 5°

DRAFTSMAN	TRACER	L'D'G DRAFTSMAN
E.L.L.	A.V.C.	
CHECKER E.W.H.	O.O.	CHIEF DRAFTSMAN

SUBMITTED:

A. M. Roe

APPROVED BY ORDER OF THE CHIEF OF ORDNANCE:

Walter Ackerman

ORD. DEPT., U. S. A.

ORDNANCE DEPT., U. S. A.

A5152737

HEAT TREATMENT & FINAL FINISH	PHYSICAL PROPERTIES					
	Y. P.		RED.		SCL.	
	T. S.		BR.			
	EL. 2		ROCK			

FEB. 1, 1938

REVISIONS

8	5-10-48			

DRG. PERTAINS TO

D6535358	.30 BMG 19A4 (FXD) & (FLEX)
D6540989	.30 BMG M19A5 (FXD)
D7114037	.30 BMG M19A6
D6901301	.30 BMG M17A1 (WC)

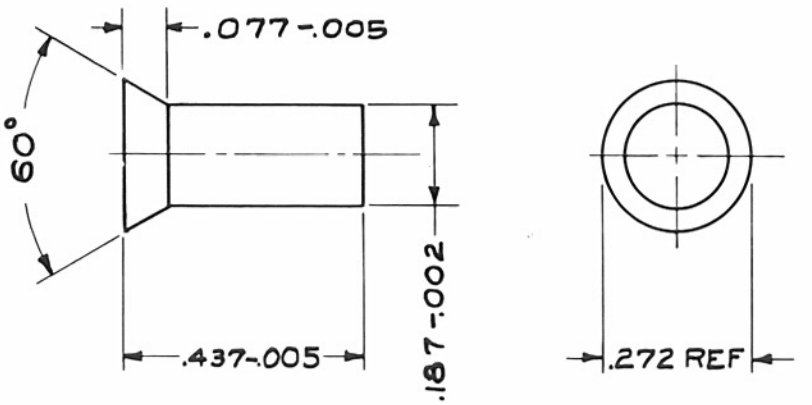

RIVET, BOTTOM PLATE

STEEL FS1035

FINISH 125

5152737

INSCRIBE PART NO. DO NOT

TOLERANCE ON DIMENSIONS NOT OTHERWISE SPECIFIED
DECIMAL ± .005
FRACTIONAL ± —
ANGULAR ± 5°

DRAFTSMAN	TRACER	L'D'G DRAFTSMAN
J.A.B.	E.R.G	
CHECKER	O.O.	CHIEF DRAFTSMAN

SUBMITTED:
A.W. Roe
ORD. DEPT., U. S. A.

APPROVED BY ORDER OF THE CHIEF OF ORDNANCE:
Walter Ackerman
ORD. DEPT., U. S. A.

ORDNANCE DEPT., U. S. A.

WAS A152737

SCALE 4/1

A 5152 737

A 5160656

HEAT TREATMENT & FINAL FINISH	PHYSICAL PROPERTIES					
	Y. P.		RED.		SCL.	
	T. S.		BR.			
	EL. 2		ROCK			

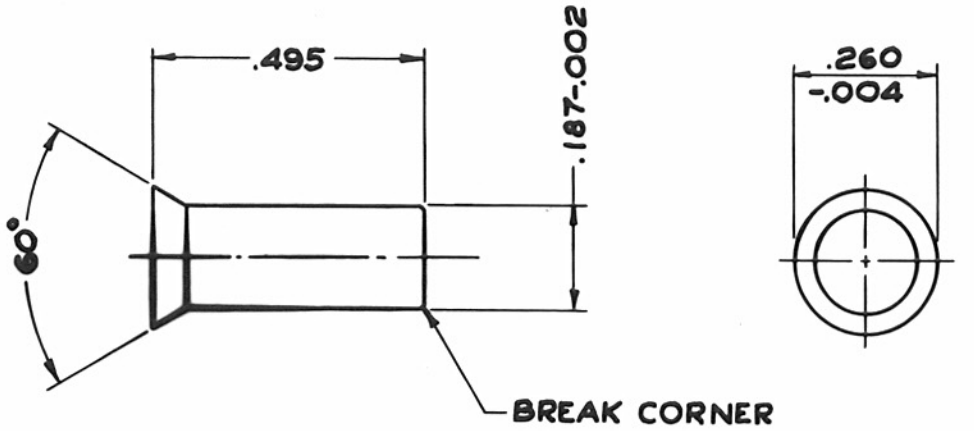

RIVET, SIGHT BRACKET (S) 5160656

STEEL FS 1035

FINISH 125 √

WAS A160656

SCALE 4/1

A 5160656

MARCH 10, 1939

REVISIONS

4	5-10-48		

DRG. PERTAINS TO

D6535358	.30 BMG M19A4 (FXD) & (FLEX)
D7114037	.30 BMG M19A6

DO NOT INSCRIBE PART NO.

TOLERANCE ON DIMENSIONS NOT OTHERWISE SPECIFIED
DECIMAL ± .005
FRACTIONAL ± —
ANGULAR ± 2°

DRAFTSMAN	TRACER	L'D'G DRAFTSMAN
M.T.	O.K.	
CHECKER LSC Eurk.	O.O.	CHIEF DRAFTSMAN

SUBMITTED:
A. W. Roe
ORD. DEPT., U. S. A.

APPROVED BY ORDER OF THE CHIEF OF ORDNANCE:
Walter Abraham
ORD. DEPT., U. S. A.

ORDNANCE DEPT., U. S. A.

SCREW, MACHINE, FLAT HD. (NF-2)
STEEL

BCLX1.1

ORDNANCE DEPT. STANDARDS (COMMERCIAL)

APPROVED 7-25-31 DATE

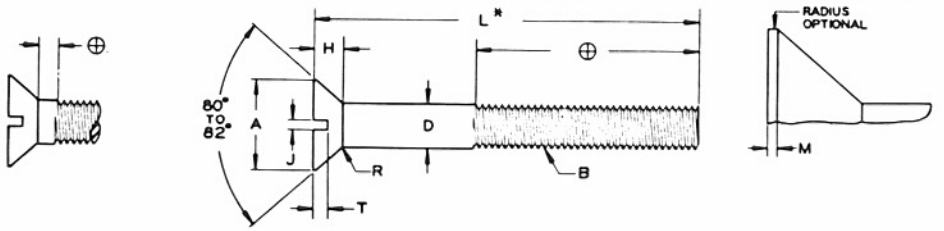

NOMINAL SIZE	#10	#12	1/4	5/16	3/8			
B THREADS PER INCH	32	28	28	24	24			
D DIAMETER OF BODY MAX.	.1900	.2160	.2500	.3125	.3750			
D DIAMETER OF BODY MIN.	.1670	.1897	.2237	.2821	.3446			
A DIAMETER OF HEAD SHARP MAX.	.385	.438	.507	.635	.762			
A DIAMETER OF HEAD SHARP MIN.	.359	.410	.477	.600	.722			
A DIAMETER OF HEAD ABS. MIN.	.348	.397	.462	.581	.700			
M WIDTH OF FLAT MAX.	.007	.008	.009	.011	.013			
H HEIGHT OF HEAD MAX.	.116	.132	.153	.191	.230			
H HEIGHT OF HEAD MIN.	.098	.112	.131	.165	.200			
J WIDTH OF SLOT MAX.	.060	.067	.075	.084	.094			
J WIDTH OF SLOT MIN.	.050	.056	.064	.072	.081			
T DEPTH OF SLOT MAX.	.053	.060	.070	.088	.106			
T DEPTH OF SLOT MIN.	.034	.039	.046	.053	.070			
R RADIUS MAX.	.062	.071	.071	.083	.083			

L LENGTH	ORDNANCE PART NUMBER - STANDARDS - PLAIN FINISH							
3/16	420601							
1/4	100866	420602						
5/16	112878	420603	420620					
3/8	100867	420604	420621	420631				
7/16	117633	420605	420622	420632				
1/2	100868	420606	191579	420633	420644			
5/8	100869	420607	178743	420634	119481			
3/4	100870	420608	420623	420635	177945			
7/8	100871	420609	190738	137504	420645			
1	100872	420610	188739	191746	111636			
1-1/8	100873	420611	420624	190799	420646			
1-1/4	100874	420612	188741	420636	125910			
1-1/2	100876	420613	216319	420637	190452			
1-3/4	100877	420614	420625	420638	190265			
1-7/8					420651			
2	100878	420615	420626	420639	192344			
2-1/4	117634	420616	420627	420640	420647			
2-1/2	117635	420617	420628	420641	420648			
2-3/4	117636	420618	420629	420642	420649			
3	117637	420619	420630	420643	420650			

MATERIAL: STEEL, COMMERCIAL, WD-1010 - 1020. DIMENSIONS IN INCHES.

NOMENCLATURE PATTERN: SCREW, MACHINE, FLAT HD, S., PLAIN FINISH, #10 - 32NF-2 x 1", DRG. BCLX1.1, PART NO. 100872.

⊕ LENGTH OF THREAD: ON SCREWS 2" LONG OR SHORTER, THREADS SHALL EXTEND TO WITHIN TWO THREADS OF THE BEARING SURFACE OF THE HEAD. LONGER LENGTHS SHALL HAVE A MINIMUM COMPLETE THREAD LENGTH OF 1-3/4"

* TOLERANCE ON LENGTH: UP TO 1" MINUS 1/32; OVER 1" TO 2" MINUS 1/16; OVER 2" MINUS 3/32.

ENGINEERING & INSPECTION SECTION - ORDIX

SUPERSEDES BCLX1.1 WITH CHANGE 7-24-47

REVISION ⑦ 7-24-47

HEAT TREATMENT AND FINAL FINISH

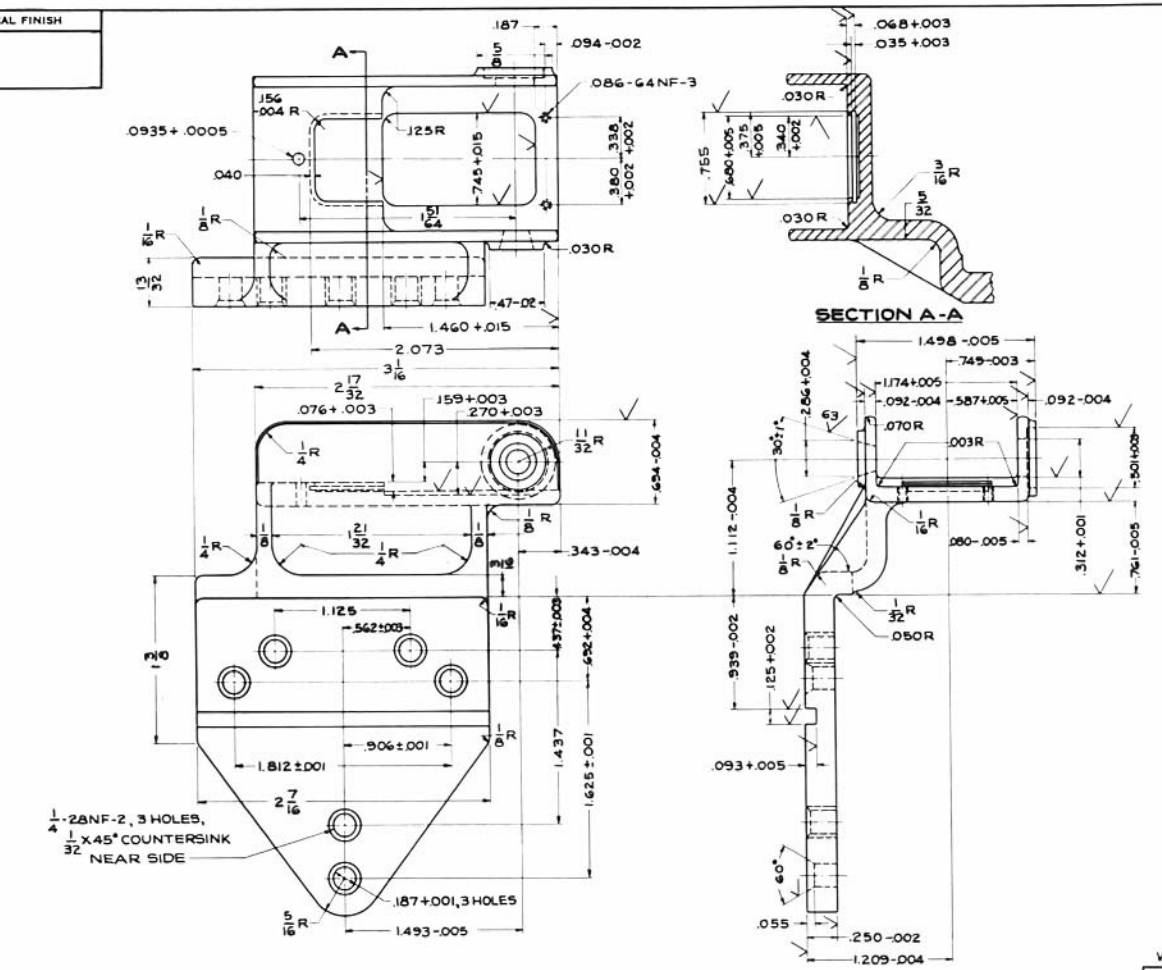

R.I.A FORGING SHOWN ON DRG C73476

BASE, REAR SIGHT (5545965)

STEEL FSXI335

FINISH $\sqrt{}$ TO BE $\frac{125}{\sqrt{}}$ OTHER SURFACES, AS SPECIFIED

SCALE 2/1

PHYSICAL PROPERTIES	
Y. P.	
T. S.	
EL. 2	
RED	
BR.	
ROCK.	
SCL.	

MARCH 10, 1939

REVISIONS

8	5-10-48		

DRG. PERTAINS TO

	.30 BMG M19A4 (FXD) M19A4 (FLEX)
06535358	
07114037	.30 BMG M19A6

C5545965

TOLERANCE ON DIMENSIONS NOT OTHERWISE SPECIFIED
DECIMAL ± .005
FRACTIONAL ± 1/64
ANGULAR ± 5°

DRAFTSMAN	TRACER	L.D.S. DRAFTSMAN
C.P.L.	Z.C.	

CHIEF DRAFTSMAN

SUBMITTED:
A.H. Roe

APPROVED BY ORDER OF THE CHIEF OF ORDNANCE
Walter Ackerman
ORD. DEPT. U.S.A.

ORDNANCE DEPT., U. S. A.
MADE AT ROCK ISLAND ARSENAL

WAS C45965

DO NOT INSCRIBE PART NO.

C 5545965

HEAT TREATMENT AND FINAL FINISH

PHYSICAL PROPERTIES	
Y. P.	
T. S.	
EL. z	
RED	
BR.	
ROCK.	
SCL.	

SEPTEMBER 30, 1936

REVISIONS				
9	5-10-48			

C5562503

DRG. PERTAINS TO

D6535358	.30 BMG M19A6 (FXD) (FLEX)
D6540989	.30 BMG M19A5 (FXD)

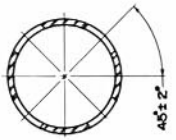

SECTION B-B

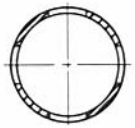

SECTION A-A

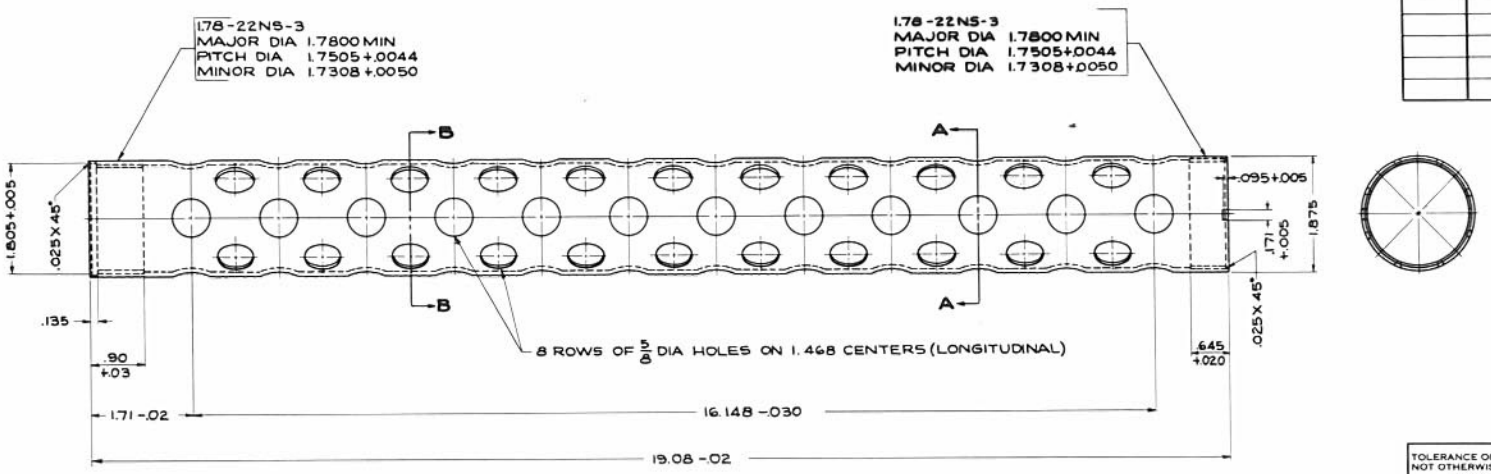

JACKET, BARREL

SEAMLESS OR ELECTRIC RESISTANCE WELDED STEEL TUBING, WD1035 (5562503)

1 7/8 O.D. X .083 (NO. 14 B.W. GAGE) WALL

FINISH 125

WAS C62503

DO NOT INSCRIBE PART NO. C 5562503

SCALE 1/1

TOLERANCE ON DIMENSIONS NOT OTHERWISE SPECIFIED
DECIMAL ± .005
FRACTIONAL ±
ANGULAR ± 5°

DRAFTSMAN	TRACER	U.S.G.S. DRAFTSMAN
M.T.	Z.C.	
CHECKED		CHIEF DRAFTSMAN

SUBMITTED:
H.H. Rose

APPROVED BY ORDER OF THE CHIEF OF ORDNANCE:
Walter Ackerman
ORD. DEPT. U. S. A.

ORDNANCE DEPT., U. S. A.

MADE AT ROCK ISLAND ARSENAL

HEAT TREATMENT AND FINAL FINISH
HEAT TREAT

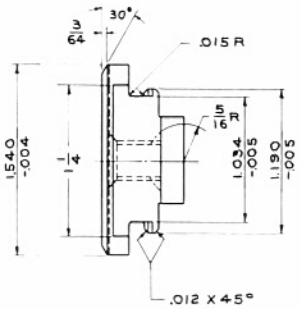

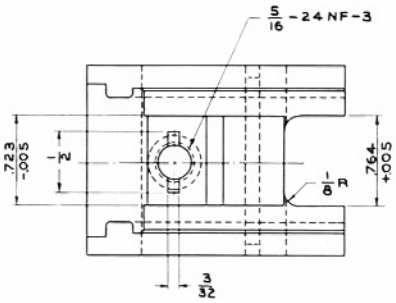

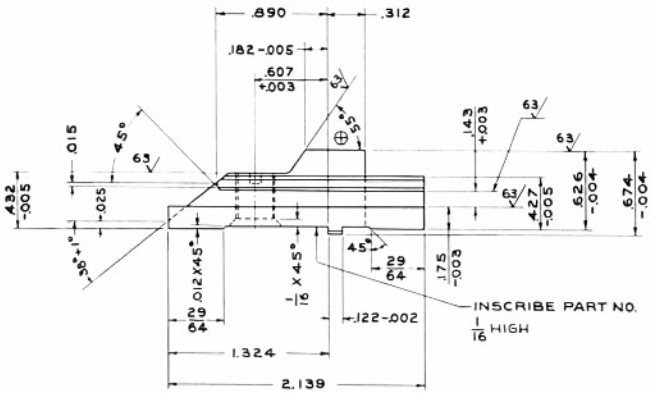

PHYSICAL PROPERTIES		FEBRUARY 1, 1938 REVISIONS			
Y. P.		17	5-10-46		
T. S.					
EL. 2					
RED					
BR.					
ROCK.	C48-54				
SCL.	—				

DRG. PERTAINS TO	
D6535358	30 BMG M19A4 (FAD) & (FLEX)
D6540989	30 BMG M19A5 (FAD)
D7114037	30 BMG M 19A6
D6901301	30 BMG M17A1 (WC)

C5564133

CAM, LOCK, BREECH

STEEL FS 4140 (C)5564133

FINISH 125/V, OTHER SURFACES, AS SPECIFIED

⊕ PERMISSIBLE ANGLE TOLERANCES NOT SPECIFIED MUST BE WITHIN LIMITS PERSCRIBED BY LOCATING DIMENSIONS.

WAS C64133

INSCRIBE PART NO.

C 5564133

SCALE 2/1

TOLERANCE ON DIMENSIONS NOT OTHERWISE SPECIFIED
DECIMAL ± .005
FRACTIONAL ± 1/64
ANGULAR ± 5°

DRAFTSMAN	TRACER	L.O.D. DRAFTSMAN
C.S.S.	A.V.C.	
CHECKED		CHIEF DRAFTSMAN

SUBMITTED:
H.H. Roe
ORD. DEPT. U. S. A.

APPROVED BY ORDER OF THE CHIEF OF ORDNANCE.
Walter Ackerman
ORD. DEPT. U. S. A.

ORDNANCE DEPT., U. S. A.

MADE AT ROCK ISLAND ARSENAL

HEAT TREATMENT AND FINAL FINISH

TYPE II FINISH, CLASS B

PHYSICAL PROPERTIES	
V P	
T S	
EL 2	
RED	
BR	
ROCK	
SCL	

D6535358

★PLATE, ASSEMBLY-C5564222

RIVET-A5020522

PLATE-D6535393

RIVET-A5020711

RIVET-A5160656 (GRIND FLUSH INSIDE & OUTSIDE)

NOTE A
℄ OF HOLE MUST BE SQUARE WITH THIS ℄ WITHIN .003 IN SIX INCHES

SCREW UP TIGHT AGAINST SHOULDER AND SWEAT THREADS WITH HIGH TEMPERATURE SOLDER (500°F MINIMUM MELTING POINT)

2.355
1.180 -.005

DRAW SCREW UP TIGHT, BACK OFF 1/6 TO 1/4 TURN AND STAKE IN TWO PLACES ON INSIDE OF CASING

★PLATE, ASSEMBLY-C5564224

CAM-C5564133

SCREW-A5020527

.190-32 NF-2, COUNTERSINK 82° TO 3/8 DIA

1/4

★BLOCK, ASSEMBLY-BG147093

RIVET-A5020601 (GRIND FLUSH OUTSIDE)

RIVET-A5020600 (GRIND FLUSH OUTSIDE)

SCREW-BCLX1.1, 100866 (STAKE)

JACKET-C5562503

FACES OF REAR MOUNTING LUGS MUST BE CENTRAL WITH FACES AT FRONT MOUNTING HOLES WITHIN .010

NOTE B
℄ OF MOUNTING HOLE MUST BE SQUARE WITH THIS ℄ WITHIN .003 IN SIX INCHES

SECTION A-A

BASE-C5545965

NO. U.S. 1938
BROWNING MACHINE GUN
U.S. CAL. .30 M1919A4
MFD. BY NAME OF M'F'R
PATENT MARKINGS

RIVET-A5152737

PLATE-D6535392

.440+.002

11.531 ±.004

GRIND FLUSH INSIDE AND OUTSIDE (2 RIVETS)

GRIND FLUSH INSIDE (14 RIVETS)

11.4812 REF

1.071

SHOW LETTER P 1/8 HIGH AFTER PROOF FIRING

.562+.002

.788 -.015

1.860 +.002

SQUARENESS OF ℄ OF FRONT MOUNTING HOLE AS MEASURED AT FACES OF ADAPTER PLATES SHALL BE WITHIN THESE PRESCRIBED LIMITS AND SHALL CONFORM TO LIMITS SPECIFIED IN NOTE A AND NOTE B

THE LIMITS OF NON PARALLELISM AND SKEWING OF ℄ OF REAR MOUNTING HOLE WITH RESPECT TO ℄ OF FRONT MOUNTING HOLE AS MEASURED AT THE FACES OF THE REAR MOUNTING LUGS, SHALL BE A MAX. .006 IN SIX INCHES AND SHALL BE WITHIN THESE PRESCRIBED LIMITS

★FINDING DIAGRAM

DO NOT INSCRIBE PART NO.

CASING, ASSEMBLY (6535358)

WAS D35358

0 1 2 3 4 5 6 7 8 9 10 11 IN.

SEPTEMBER 30, 1936

REVISIONS
17 5-10-48

CLASS	DIVISION	DRAWING	FILE

TOLERANCE ON DIMENSIONS NOT OTHERWISE SPECIFIED
DECIMAL ± .005
FRACTIONAL ± 1/64
ANGULAR ± 2°

MATERIAL: WCO
TRACE: E.C.
CHECKED: [illegible]
LAST REVISION:

DRG. PERTAINS TO
51-83-1 AT 20 M/F
51-84-1 AT 5 M/F

SUBMITTED: A.B. Rice

EXAMINED:

ORD. DEPT. U.S.A.

APPROVED BY ORDER OF THE CHIEF OF ORDNANCE
Milton Halsey Thomas
ORD. DEPT. U.S.A.

D 6535358

ORDNANCE DEPT. U.S.A.

MADE AT ROCK ISLAND ARSENAL

HEAT TREATMENT AND FINAL FINISH

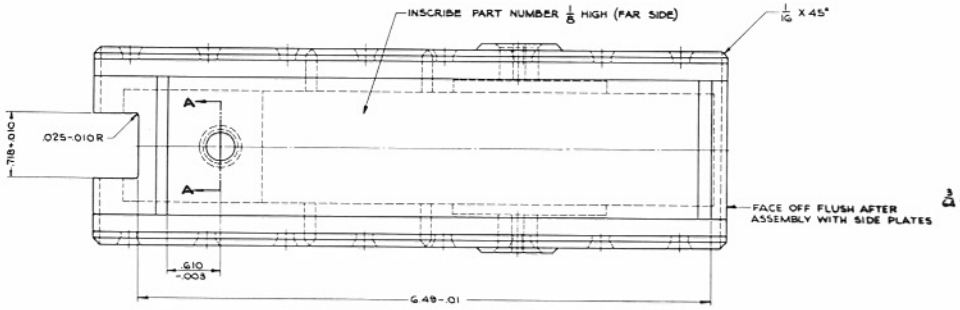

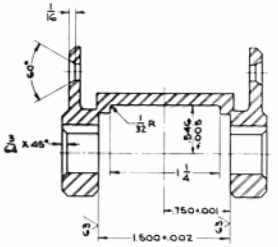

SECTION B-B

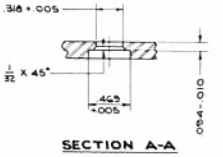

SECTION A-A

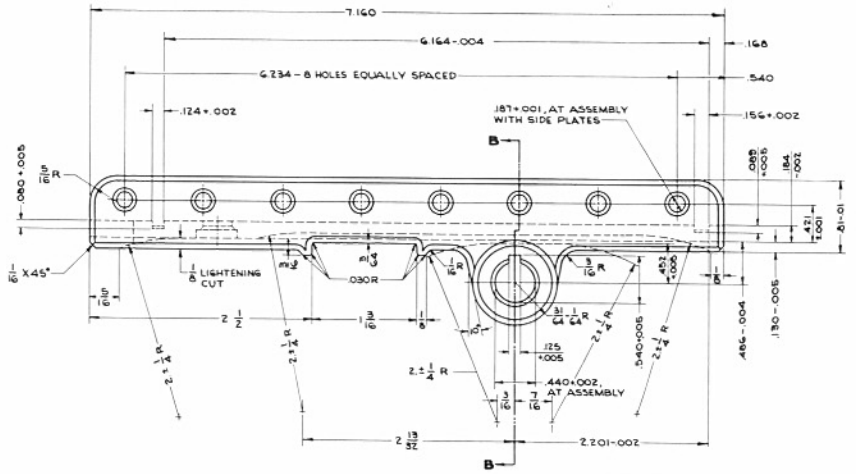

PLATE, BOTTOM
STEEL FS1035 (G535392)
FINISH 125/ OTHER SURFACES, AS SPECIFIED

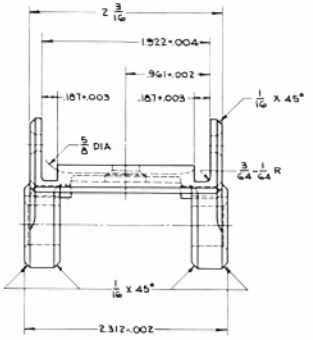

R.I.A. FORGING SHOWN ON DRG C.F.B464

SCALE 2/1

WAS D35392

PHYSICAL PROPERTIES

Y. P.	
T. S.	
El. %	
R.A.	
BHN	
ROCK.	
IZOD	

DG535392

DO INSCRIBE PART NO.

FEBRUARY 1, 1938

REVISIONS

17 5-10-48

CLASS	DIVISION	DRAWING	FILE

TOLERANCE ON DIMENSIONS NOT OTHERWISE SPECIFIED
DECIMAL ± .010
FRACTIONAL 1/64
ANGULAR ± 5°

DRAFTSMAN J.J.V.
TRACER
CHECKED
ENG'G DEPT'MENT
CHIEF DRAFTSMAN

DRG. PERTAINS TO

DG535356	30 SHEET 1 PAGE
DG540989	44 SHEET 1 PAGE
D7114037	39 SHEET 1 PAGE
DG501301	25 SHEET 1 PAGE

SUBMITTED:

EXAMINED:

ORD. DEPT. U.S.A.

APPROVED BY ORDER OF THE CHIEF OF ORDNANCE

Walter A. Ackerman

ORD. DEPT. U.S.A.

DG535392

ORDNANCE DEPT. U.S.A.

BASE AT ROCK ISLAND ARSENAL

HEAT TREATMENT & FINAL FINISH

CARBON CASE FRONT HALF ONLY .004 TO .008 DEEP (ROCK A75-80)

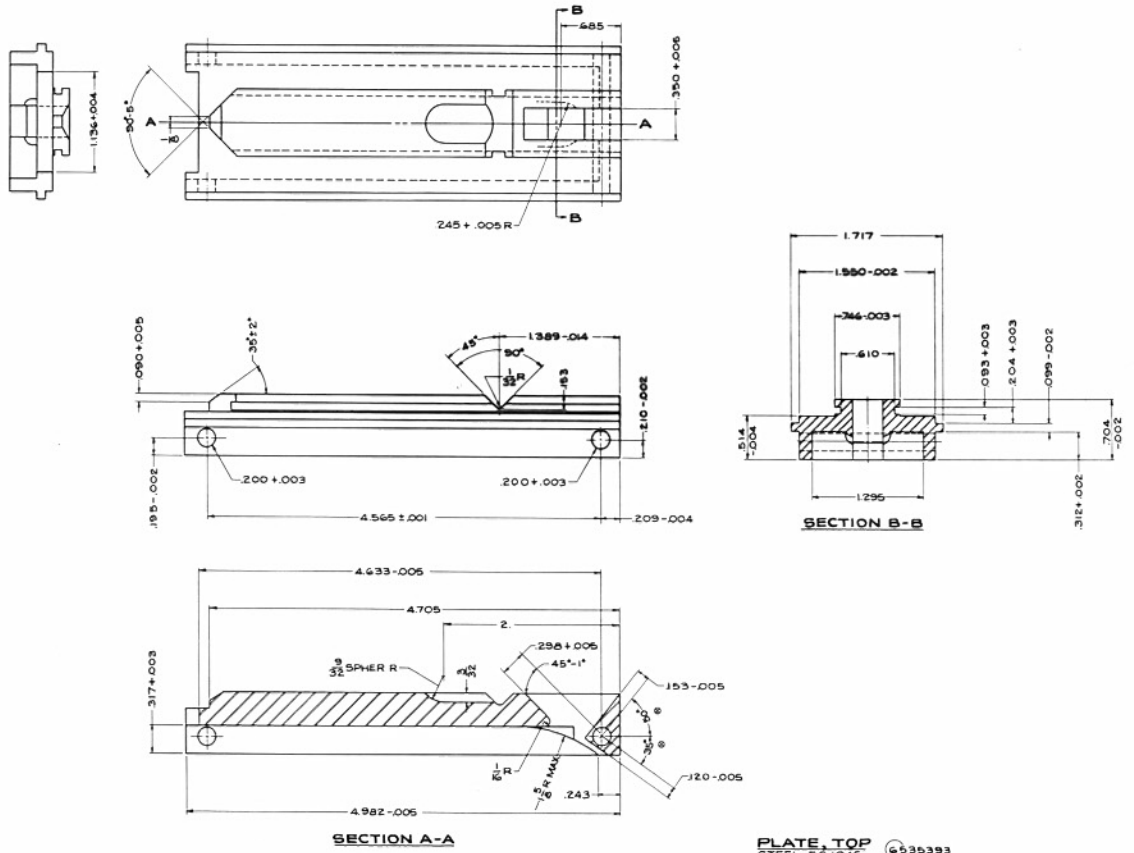

PLATE, TOP
STEEL FS1045
FINISH 125

6535393

PERMISSIBLE ANGLE TOLERANCES NOT SPECIFIED MUST BE WITHIN LIMITS PRESCRIBED BY LOCATING DIMENSIONS.

WAS D35393

SCALE 2/1

DO NOT INSCRIBE PART NO.

FEBRUARY 1, 1938	CLASS	DIVISION	DRAWING	FILE
REVISIONS				
19 5-10-48				

TOLERANCE ON DIMENSIONS NOT OTHERWISE SPECIFIED
DECIMAL ± .006
FRACTIONAL ± 1/64
ANGULAR ± 1°

DRAFTSMAN	TRACER	LTR. DRAFTSMAN
C.S.S.	Z.C.	
CHECKER		CHIEF DRAFTSMAN

DRG. PERTAINS TO	
D6901301	
D7114037	
D6535358	
D6540989	

SUBMITTED: A.H. Roe

EXAMINED:

APPROVED BY ORDER OF THE CHIEF OF ORDNANCE

Walter Ackerman
ORD. DEPT., U.S.A.

D 6535393

ORDNANCE DEPT., U.S.A.

MADE AT ROCK ISLAND ARSENAL

D6535393